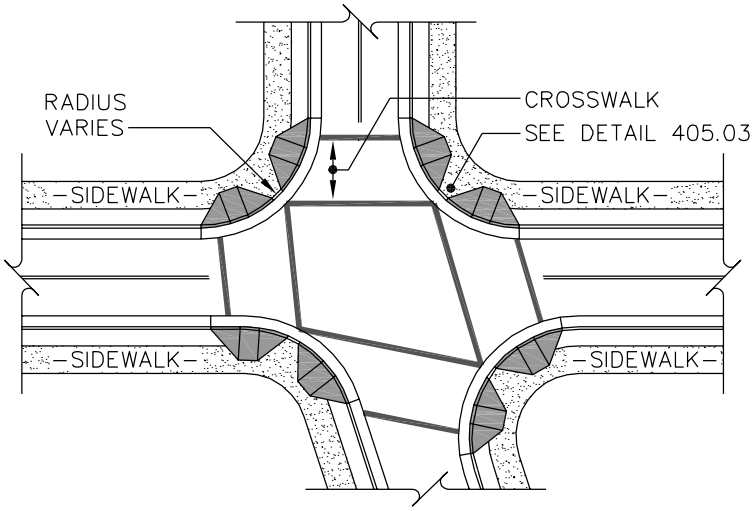

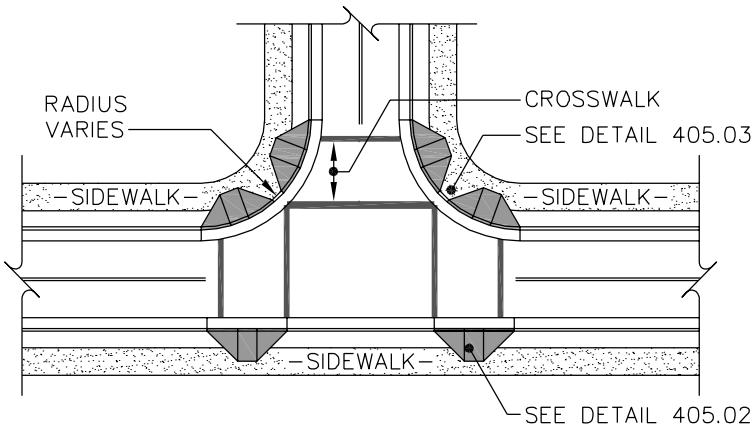

TOWN of CLAYTON

USE WITH THE TOWN of CLAYTON STANDARD SPECIFICATIONS ONLY

TYPICAL WHEELCHAIR RAMP SCHEMATICS

SCALE:	DETAIL #
Not To Scale	405.01
REVISION DATE:	SHEET #:
July, 2010	1 of 1